Scomi EQUIPMENT INC

SCM-5500 VFD
DECANTER CENTRIFUGE

Scomi Equipment Inc offers a comprehensive range of Solids Control equipment for oilfield applications. The Scomi Equipment Inc line of high performance centrifuges are specifically designed and engineered to efficiently and reliably separate solids from drilling mud.

The SCM-5500 VFD is precision engineered to create high G forces to separate fine solids from oilfield drilling muds and industrial fluids handling applications.

PERFORMANCE

The SCM-5500 VFD bowl and conveyor speed is infinitely adjustable up to 3750 rpm generating 3150 g's of force providing improved solids removal and reduced drilling fluids costs.

PRECISION ENGINEERING

The advanced design and precision balancing of the bowl and conveyor allow for smooth operation for extended periods of time which increases the solids removal performance of the centrifuge. Stainless steel bowl and conveyor increase resistance to wear, corrosion and chemicals, thus providing longer service life and lower maintenance costs.

FEATURES & BENEFITS

- Stainless steel rotating assembly
- Replaceable wear inserts and replaceable plows to increase service life
- Tungsten carbide scroll inserts for reduce maintenance costs and improved solids conveyance
- Rugged construction and oilfield skid for the toughest environments
- Vibration limit switches for increased safety
- Adjustable effluent ports for increased solids removal performance
- Variable-frequency bowl and conveyor drives designed for infinite speed configurations
- Runs efficiently at high speeds for long periods of time for efficient solids separation
- Ideal for processing un-weighted or weighted drilling fluids
- Effective high speed low gravity solids separation or low speed high gravity solids recovery
- Torque overload protection shuts down feed pump to reduce packing off

Scomi EQUIPMENT INC

PRINCIPLE OF OPERATION

The precision engineering of the SCM-5500 VFD allows for the high speed separation of solids from drilling fluids and industrial fluids handling applications. Drilling fluids or feed slurries are introduced to the rotating assembly via a feed tube and enters the unit. Centrifugal force, up to 3150 g's at 3750 rpm, is applied to the slurry forcing the sand and silt particles to settle against the wall of the bowl. The solids are conveyed out of the pool of drilling fluid up the beach of the conical section to the solids discharge ports by the tungsten carbide tipped conveyor. The cleaned drilling fluid exits through the adjustable weir ports that regulate the pool depth and offer increase flexibility of separation.

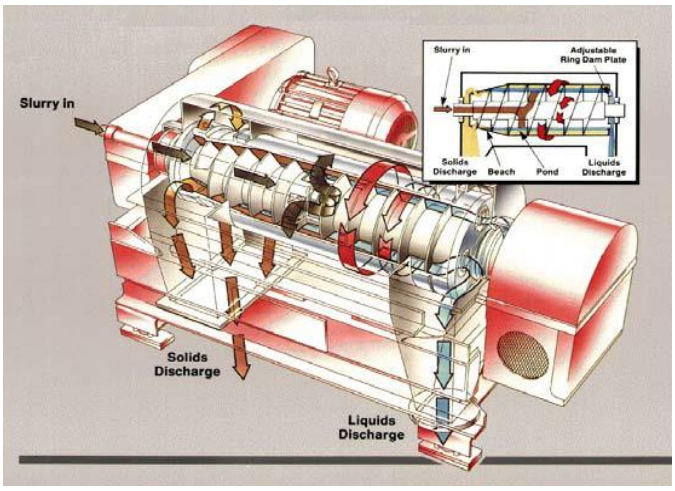

CONTROL PANEL

Class 1, Div 1 pressurized control panel with PLC controlled VFD bowl, back and feed pump drive. A graphic HMI to control and display centrifuge status, bowl rpm, conveyor differential RPM, conveyor and bowl torque loading, feed rate and alarm status.

SPECIFICATIONS

General	
Model	SCM-5500 VFD
Maximum Speed	3750 rpm
Maximum G force	3150 g's
Maximum Flow	250 gpm @ 9.8 ppg
Bowl Diameter	16"
Bowl Length	55"
Bowl Material	316 Stainless Steel
Conveyor Differential	10 – 60 rpm
Conveyor	Axial or radial flights
Gear Box Ratio	53:1
Gear Box Type	Two-stages Planetary
Gear Box Torque	36,000 in lbs
Pool Depth Setting	4 Adjustable 360 degree dams
Controls	Variable Frequency Drive
Dimensions	
Length	149" (3,785 mm)
Width	54" (1,372 mm)
Height	53" (1,346 mm)
Weight	
Net	8,200 lbs (3,719 kg)
Control Panel	2,135 lbs (968.4 kg)
Utility Requirements	
Power	60 hp (44.7 kW) Main Drive 20 hp (14.9 kW) Back Drive 20 hp (14.9 kW) Pump Drive
Voltage	380 / 460 V
Frequency	50 / 60 Hz
Phase	3 Phase

Scomi EQUIPMENT INC
www.scomiequipment.com
www.scomioiltools.com.my

Middle East	T	+971 4 883 8236	F	+971 4 883 8920	E	dubai.sales@ae.scomioiltools.com
Americas	T	+1 281 260 6016	F	+1 281 260 6969	E	sales@scomiequipment.com
Asia	T	+60 3 7717 3000	F	+60 3 7728 5202	E	kl.sales@my.scomioiltools.com

Terms & conditions apply. Please contact Scomi Equipment representative for further information.
Copyright ® 2013 Scomi Equipment Inc. All Rights Reserved.
Printed on environmentally friendly paper • FSDSND-Rev0810